REV.	DATE	ECR NO.	DESCRIPTION
NC	07/31/05	XXXXXX	INITIAL RELEASE
A	11/02/05	XXXXXX	ADD 141/U CABLE TO DESCRIPTION
B	07/30/13	2502	MODIFY DESCRIPTION, ADD ELECTRICAL & MECHANICAL NOTES; UPDATE FORMAT

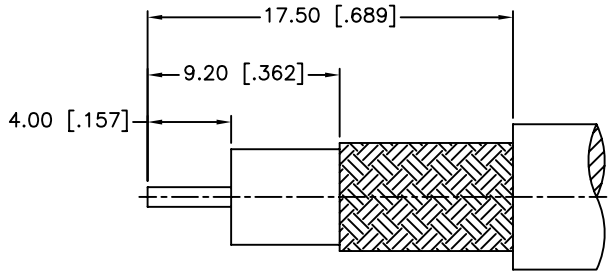

RECOMMENDED
CABLE STRIPPING DIM'S

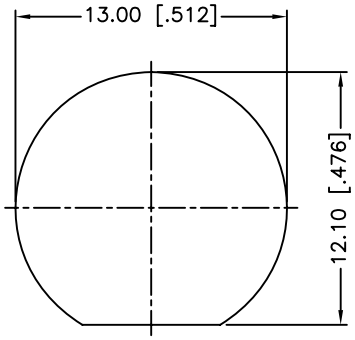

RECOMMENDED
MOUNTING HOLE

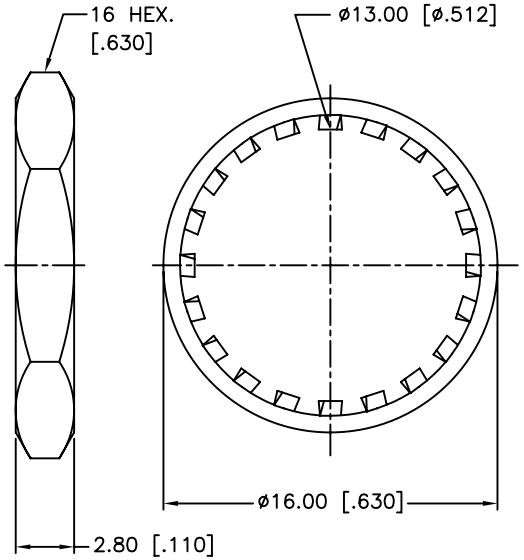

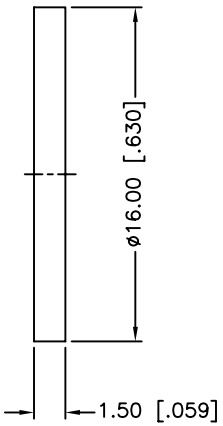

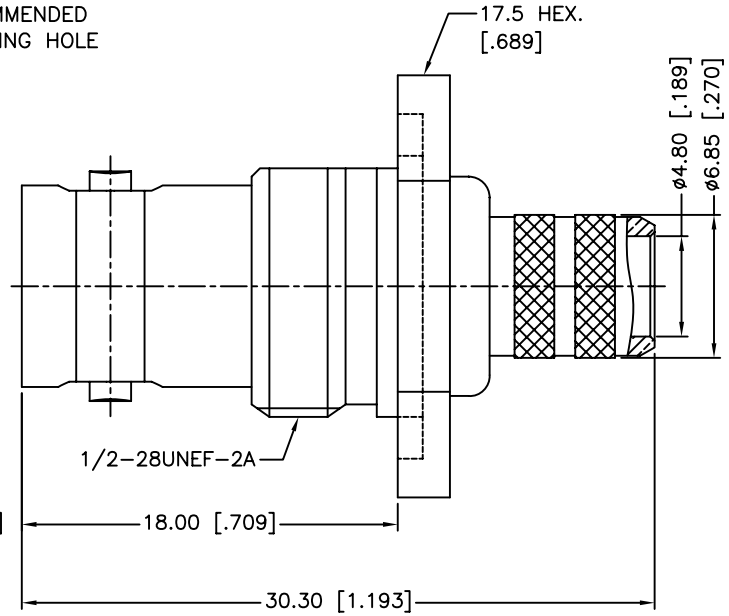

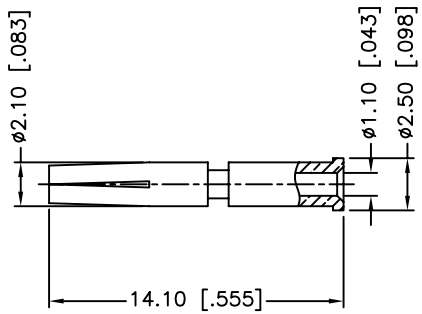

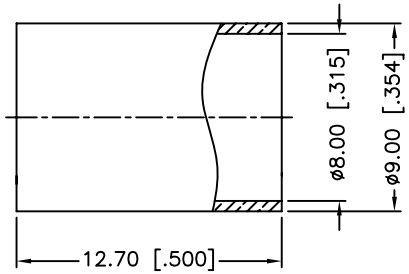

1. IMPEDANCE: 75 OHM
2. FREQUENCY RANGE: 0–2 GHZ
3. VSWR: 1.3 MAX.
4. DIELECTRIC WITHSTANDING VOLTAGE: 300 VRMS, MIN.
5. DURABILITY: 500 CYCLES MIN.
6. TEMPERATURE RANGE: –65°C TO +165°C
7. CRIMPED FERRULE
   HEX. CRIMP SIZE .320"
8. CRIMPED CONTACT PIN
   HEX. CRIMP SIZE .068"
9. MAX. PANEL THICKNESS=3.5mm

	DESCRIPTION	MATERIAL	FINISH	QTY
9	FERRULE	BRASS	NICKEL	1
8	CONTACT PIN	PHOSPHOR BRONZE	GOLD	1
7	HEX NUT	BRASS	NICKEL	1
6	LOCK WASHER	BRASS	NICKEL	1
5	GASKET	RUBBER	RED	1
4	BARREL	BRASS	NICKEL	1
3	INSULATOR	PTFE	NATURAL	1
2	BODY	BRASS	NICKEL	1
1	HOUSING	BRASS	NICKEL	1

UNLESS OTHERWISE SPECIFIED DIMENSIONS ARE IN MILLIMETERS. DIMENSIONS IN [ ] ARE IN INCHES AND FOR CUSTOMER REFERANCE ONLY.
UNLESS OTHERWISE SPECIFIED TOLERANCES FOR MILLIMETERS ARE:
<0.5 ± 0.05mm
0.5 – 6mm ± 0.10mm
6 – 30mm ± 0.20mm
30 – 120mm ± 0.30mm
ANGLES ± 1°
UNLESS OTHERWISE SPECIFIED TOLERANCES FOR INCHES ARE:
<.020 ± 0.002"
.020 – .236 = ± 0.004"
.236 – 1.180 = ± 0.007"
1.180 – 4.724 = ± 0.012"
ANGLES ± 1°

DO NOT SCALE DRAWING

APPROVALS		DATE
DRAWN	M.ZHANG	07/30/13
CHECKED		
ISSUED		
SHEET	1 OF 1	

CAD FILE C:/CONNEX/112732.DWG

Amphenol Connex

PART DESCRIPTION
BNC 75 OHM BULKHEAD CRIMP JACK
(FOR RG-6/U CABLE)

PART NO. 112732

DWG. NO. 112732.DWG | REV. B | SIZE A | SCALE NA